isenberg® by FLUSSO
LUXURY PLUMBING FIXTURES

Serie 150™

150.1280 | Deck Diverter With Holder & Hose

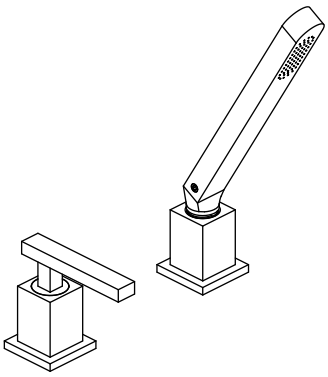

SPECIFICATIONS:

- Solid Brass construction
- Two Hole Deck Mount Installation
- Deck Diverter controls flow between spout and hand held
- Includes backflow prevention check valve
- Use with valve DKM.2420 [Included]

STANDARDS:

- ASME A112.18.1 / CSA B125.1, NSF-61

FLOW
Efficient
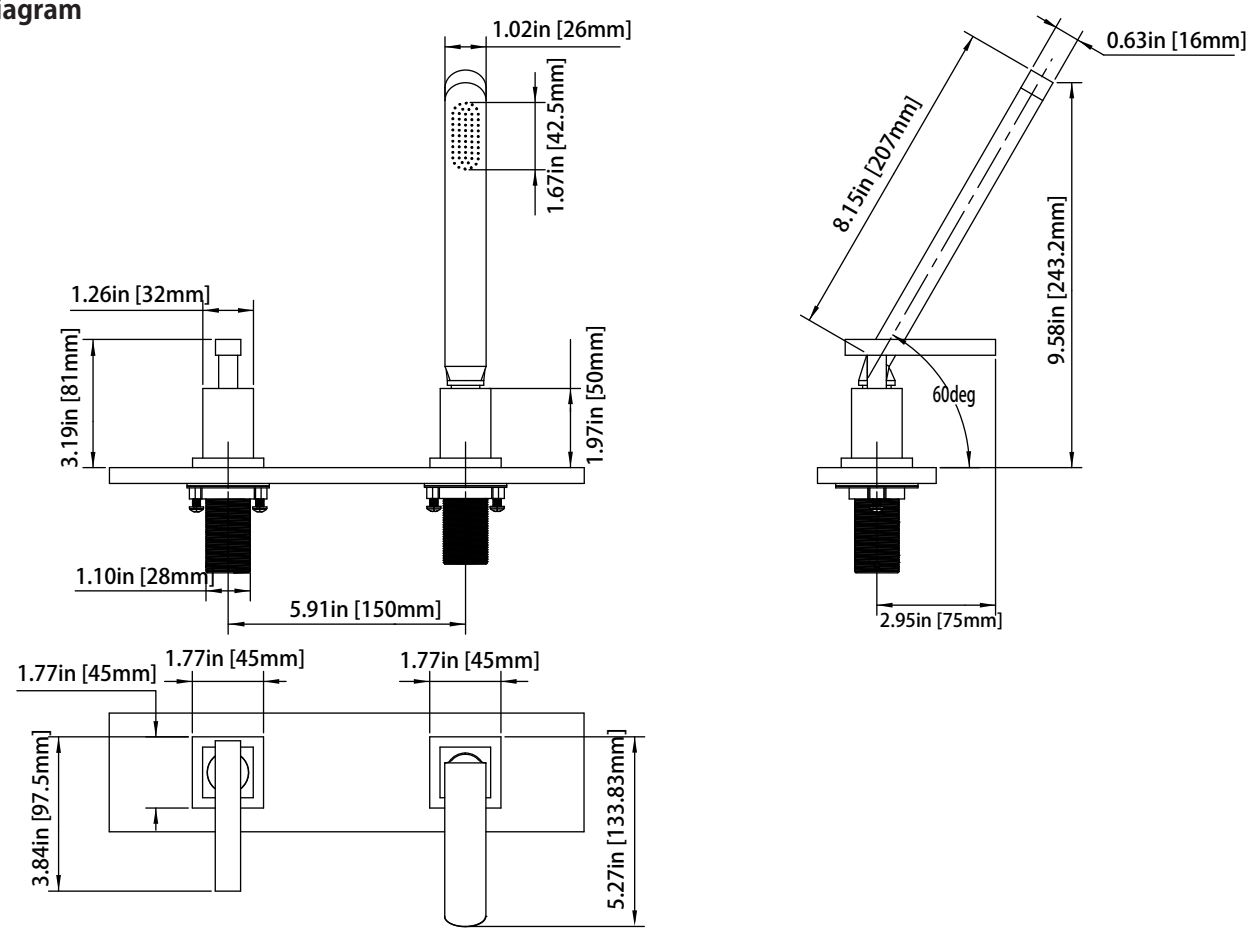
Technical Diagram