isenberg® by FLUSSO
LUXURY PLUMBING FIXTURES

# Serie 196™

## 196.2420 | 5-Hole Deck Mounted Roman Tub Filler With Hand Held Shower

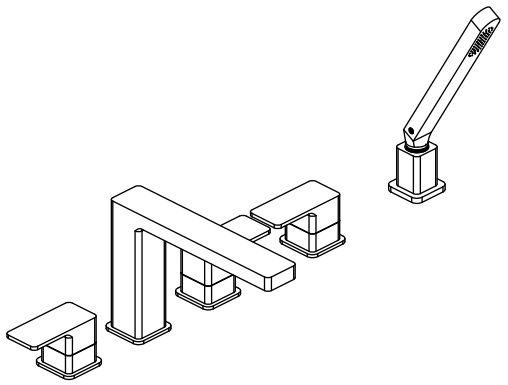

**SPECIFICATIONS:**

- Solid Brass construction - includes valves DKM.2420
- Five Hole Installation
- Flow Rate = 8.5 GPM @ 60 PSI
- Hand Shower Flow Rate = 1.8 GPM @ 60 PSI w/ back flow prevention
- Diverter handle controls water flow between spout and hand held

**STANDARDS:**

- ASME A112.18.1 / CSA B125.1

### Technical Diagram

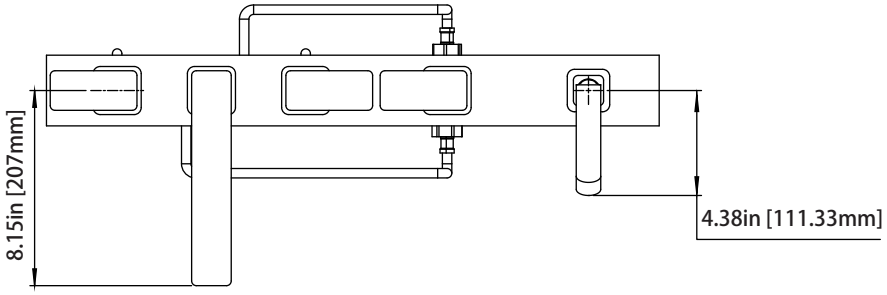


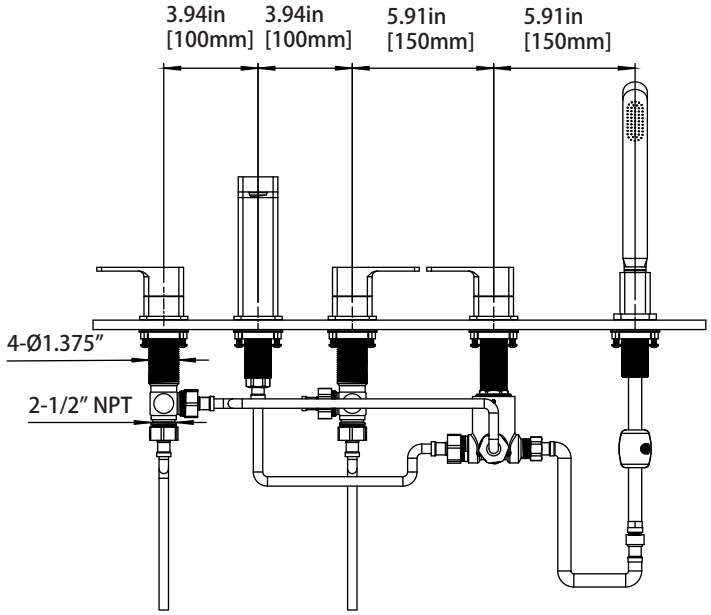


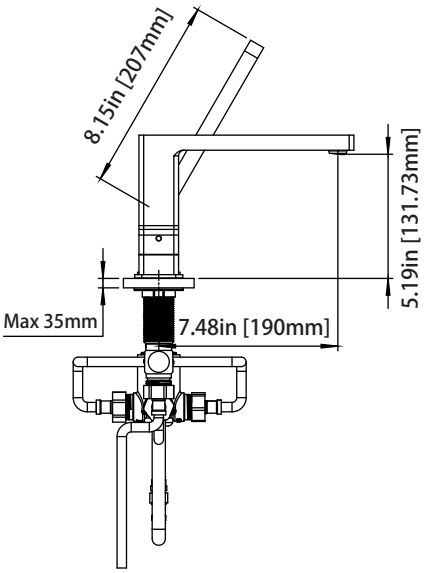


**Critical Dimensions in Inches [mm] - Ver 2.54**